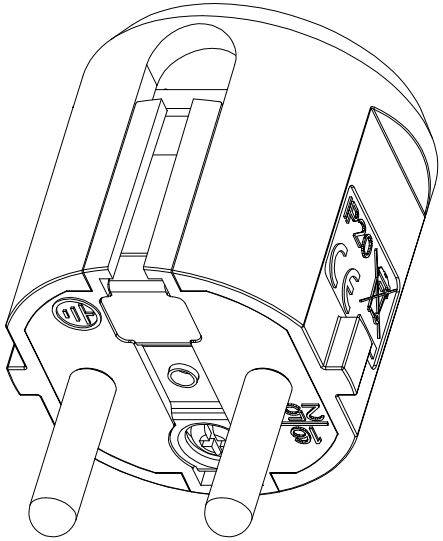

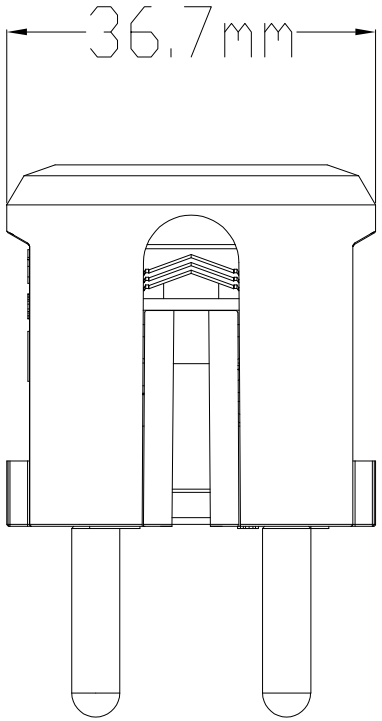
36.7mm

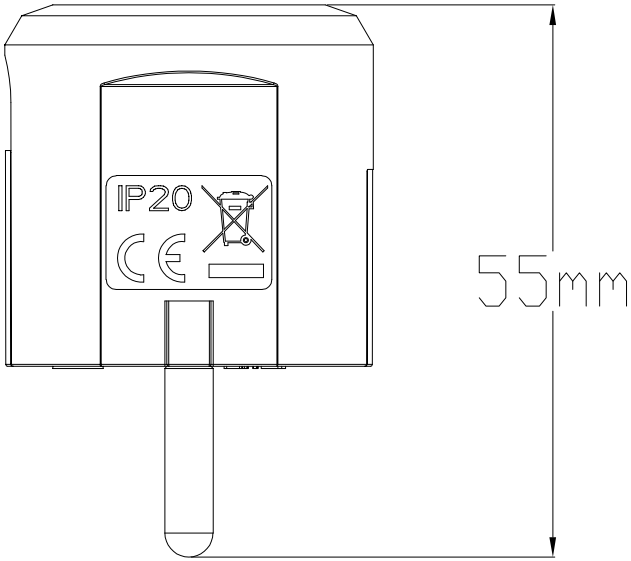
IP20
55mm